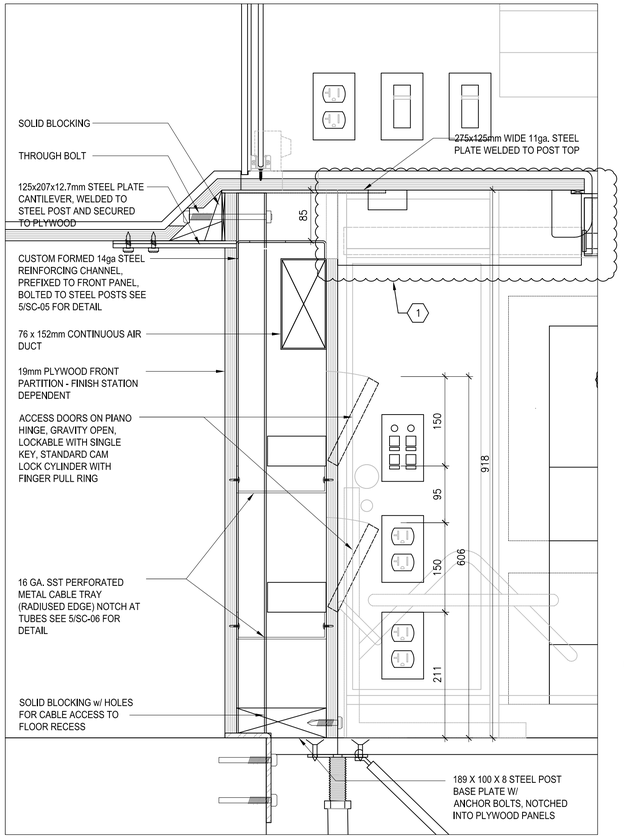

1 SC-05 SECTION DETAIL: RIGHT PARTITION - UPPER
SCALE: 1:5

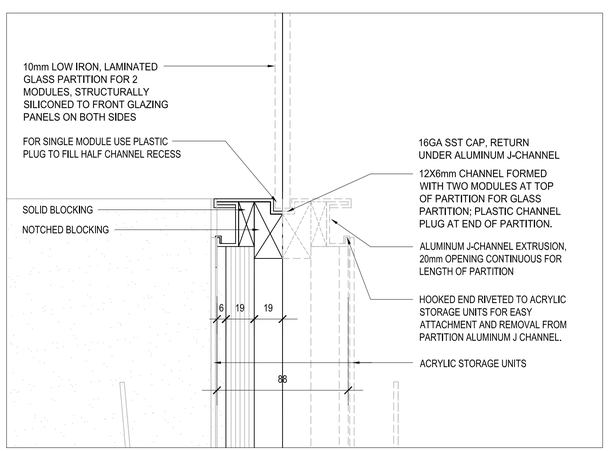

2 SC-05 SECTION DETAIL: RIGHT PARTITION - UPPER
SCALE: 1:5

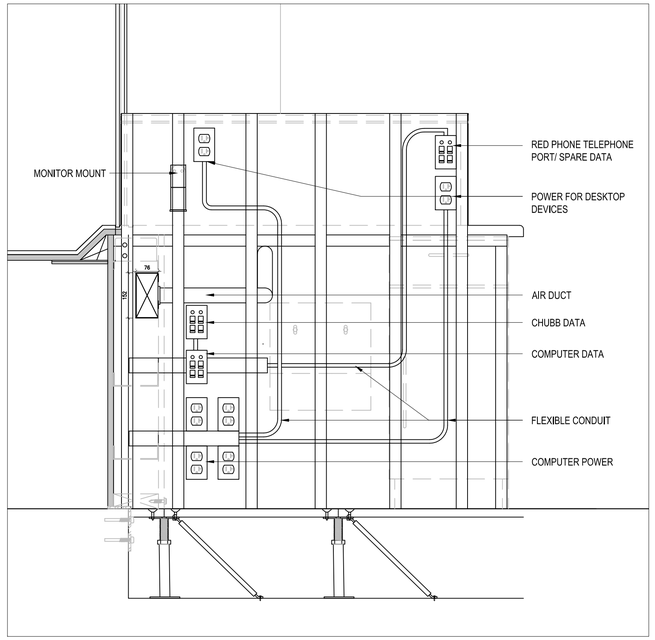

3 SC-05 ELEVATION: LEFT PARTITION
SCALE: 1:10

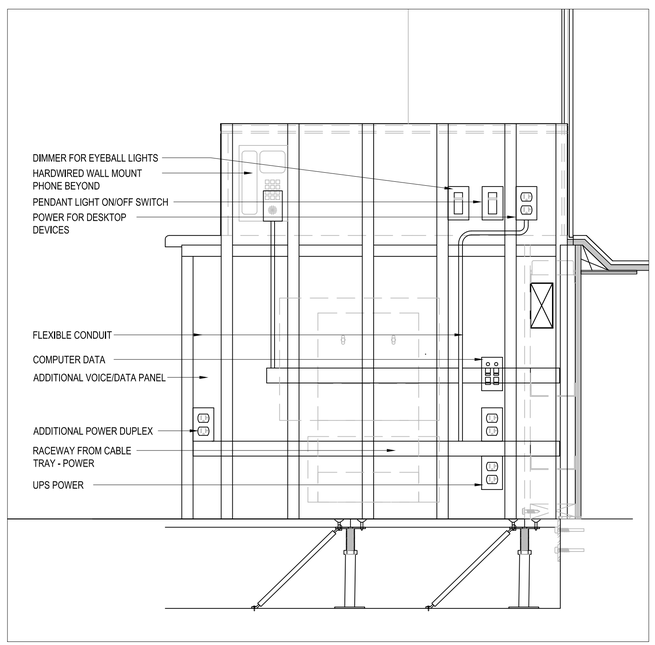

4 SC-05 ELEVATION - RIGHT PARTITION
SCALE: 1:10

METRIC

ALL DIMENSIONS SHOWN ARE IN METRES AND/OR MILLIMETRES UNLESS OTHERWISE NOTED.

DISCLAIMER
THIS DRAWING IS PROVIDED FOR INSTRUCTIONAL DESIGN PURPOSES ONLY BASED ON METROLINX GO TRANSIT DESIGN GUIDELINES AND REQUIREMENTS. THE CONSULTANT SHALL VERIFY FOR LOCAL CODE COMPLIANCE, EXISTING SITE CONDITIONS AND INTER DISCIPLINARY DRAWING COORDINATION. ALL DIMENSIONS AND SPECIFICATIONS SHOULD BE VERIFIED BY CONSULTANT AND/OR CONTRACTOR BEFORE ACTUAL CONSTRUCTION BEGINS.

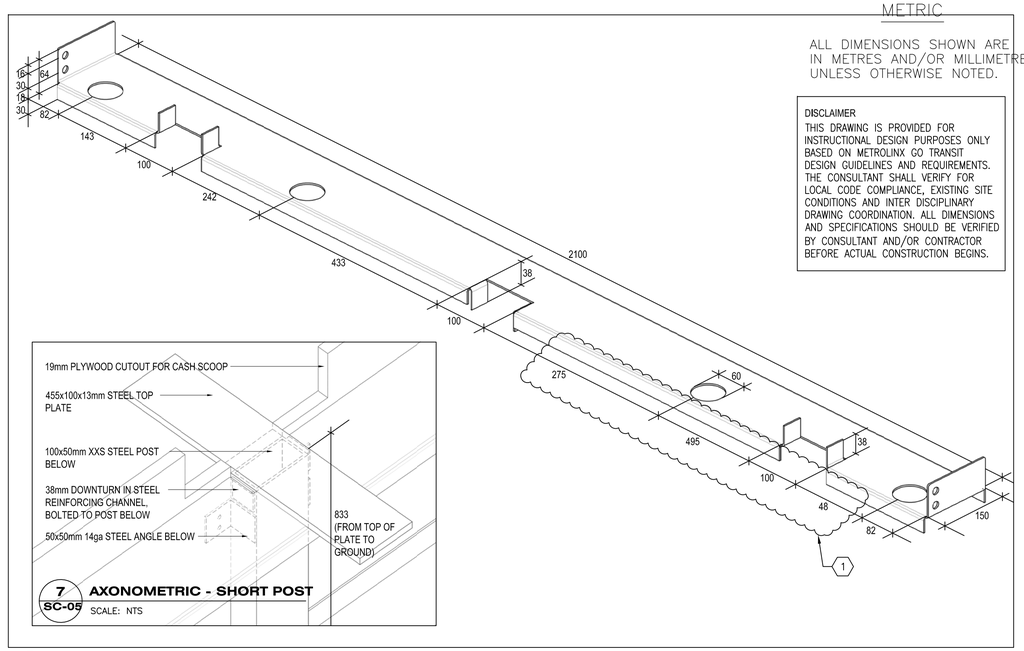

7 SC-05 AXONOMETRIC - SHORT POST
SCALE: NTS

5 SC-05 AXONOMETRIC - REINFORCING CHANNEL
SCALE: NTS

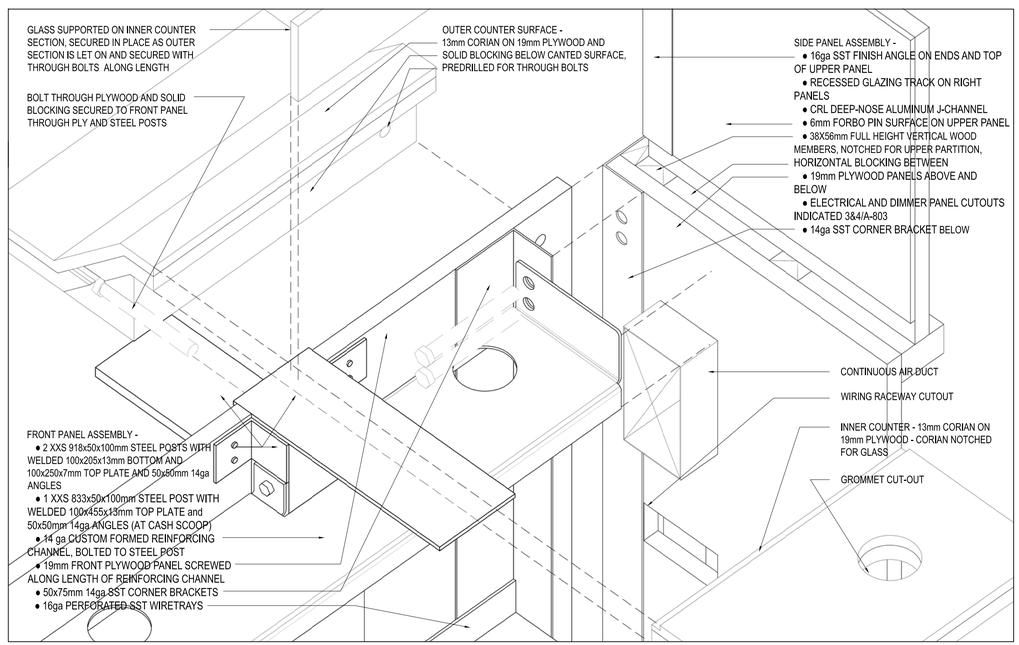

6 SC-05 EXPLODED AXONOMETRIC - FRONT & RIGHT PARTITION CONNECTION DETAIL
SCALE: NTS

METROLINX PROJECT NO.

REFERENCE DRAWINGS		ISSUE			REVISIONS		
					1	JULY 2015	LESSONS LEARNED REVISIONS
DWG NO.	TITLE	NO.	DATE	ISSUED FOR	REV.	DATE	

DRAWN BY: A.O/C.G/S.C/J.W 13/02/04	DESIGNED BY: 13/02/04
CHECKED BY: P.J 13/02/04	APPROVED BY: GO 14/03/05
SCALE: N.T.S.	FULL SIZE ONLY

A Division of METROLINX

GO TRANSIT
SERVICE COUNTER

DETAILS TYPICAL

CONTRACT NO.	DWG. NO.	REV.	SHEET
	SC–05	1	