METRIC

ALL DIMENSIONS SHOWN ARE IN METRES AND/OR MILLIMETRES UNLESS OTHERWISE NOTED.

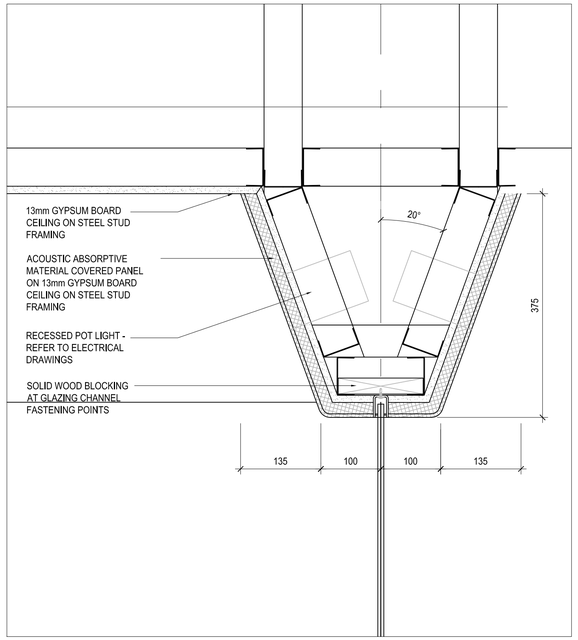

1 SC-06 SECTION DETAIL - ACOUSTIC BAFFLE
SCALE: 1:10

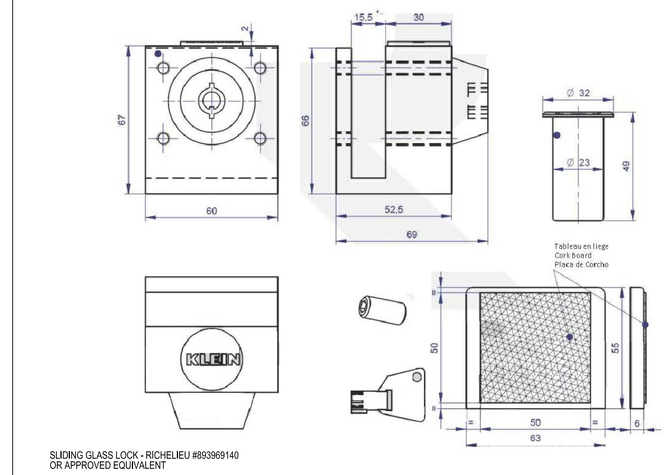

SLIDING GLASS LOCK - RICHELIEU #893969140 OR APPROVED EQUIVALENT

4 SC-06 SLIDING PANEL HANDLE AND KEY LOCK
SCALE: NTS

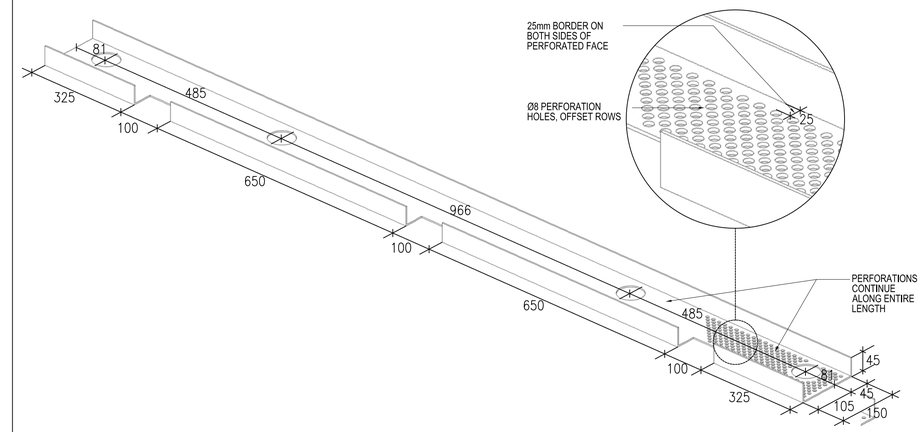

5 SC-06 AXONOMETRIC - PERFORATED CABLE TRAY
SCALE: NTS

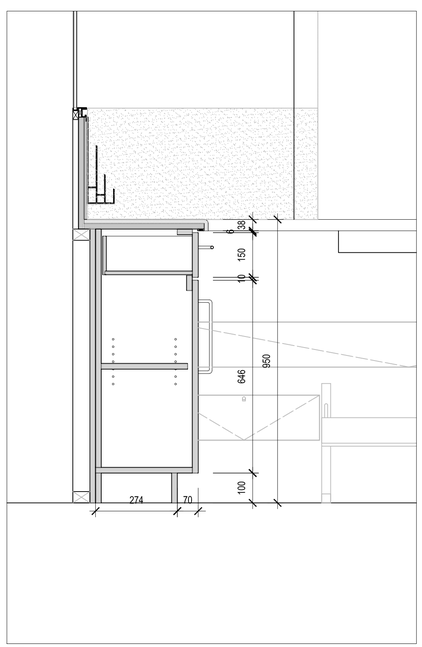

2 SC-06 SECTION DETAIL - STORAGE UNIT
SCALE: 1:10

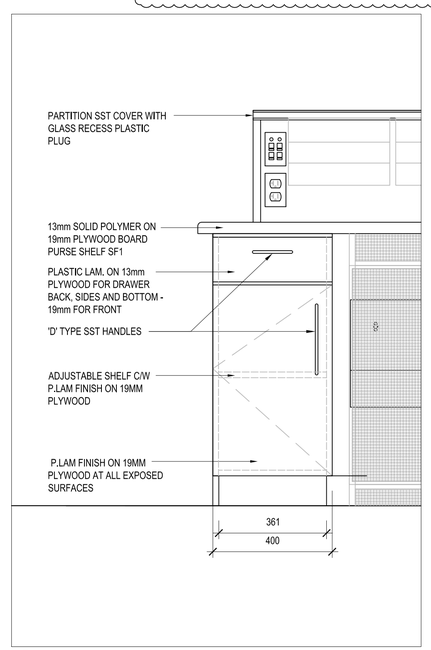

3 SC-06 ELEVATION - STORAGE UNIT
SCALE: 1:10

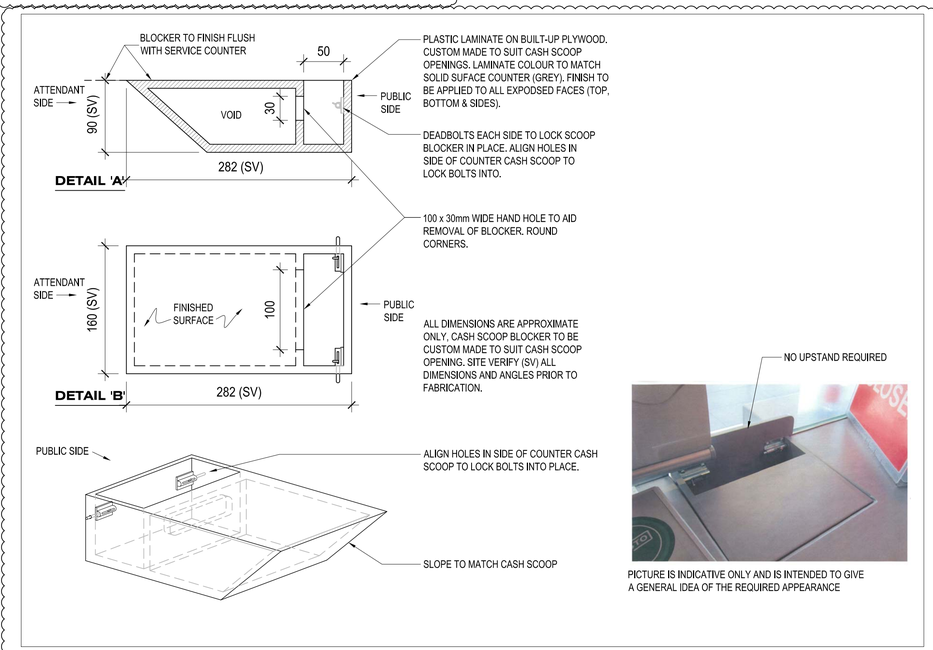

PICTURE IS INDICATIVE ONLY AND IS INTENDED TO GIVE A GENERAL IDEA OF THE REQUIRED APPEARANCE

6 SC-06 AXONOMETRIC - CASH SCOOP BLOCKER
SCALE: NTS

DISCLAIMER
THIS DRAWING IS PROVIDED FOR INSTRUCTIONAL DESIGN PURPOSES ONLY BASED ON METROLINX GO TRANSIT DESIGN GUIDELINES AND REQUIREMENTS. THE CONSULTANT SHALL VERIFY FOR LOCAL CODE COMPLIANCE, EXISTING SITE CONDITIONS AND INTER DISCIPLINARY DRAWING COORDINATION. ALL DIMENSIONS AND SPECIFICATIONS SHOULD BE VERIFIED BY CONSULTANT AND/OR CONTRACTOR BEFORE ACTUAL CONSTRUCTION BEGINS.

METROLINX PROJECT NO.

REFERENCE DRAWINGS		ISSUE			REVISIONS		
					1	JULY 2015	LESSONS LEARNED REVISIONS
DWG NO.	TITLE	NO.	DATE	ISSUED FOR	REV.	DATE	

DRAWN BY: A.O/C.G/S.C/J.W 13/02/04	DESIGNED BY: 13/02/04
CHECKED BY: P.J 13/02/04	APPROVED BY: GO 14/03/05
SCALE: N.T.S.	FULL SIZE ONLY

A Division of METROLINX

GO TRANSIT
SERVICE COUNTER
DETAILS TYPICAL

CONTRACT NO.	DWG. NO.	REV.	SHEET
	SC-06	1	