NOTE:
THIS DRAWING IS PROVIDED FOR INSTRUCTIONAL DESIGN PURPOSES ONLY BASED ON METROLINX GO TRANSIT DESIGN GUIDELINES AND REQUIREMENTS. THE CONSULTANT SHALL VERIFY FOR LOCAL CODE COMPLIANCE, EXISTING SITE CONDITIONS AND INTER DISCIPLINARY DRAWING COORDINATION. ALL DIMENSIONS AND SPECIFICATIONS SHOULD BE VERIFIED BY CONSULTANT AND/OR CONTRACTOR BEFORE ACTUAL CONSTRUCTION BEGINS.

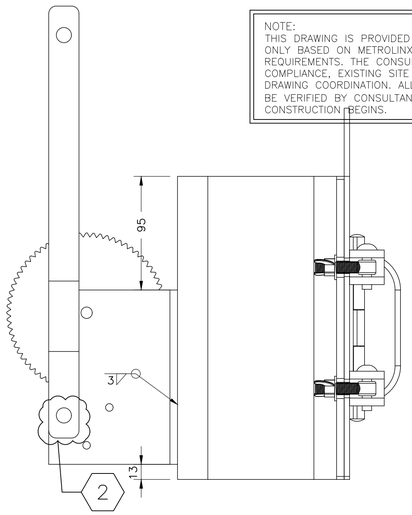

B / – ELEVATION
RIGHT SIDE VIEW

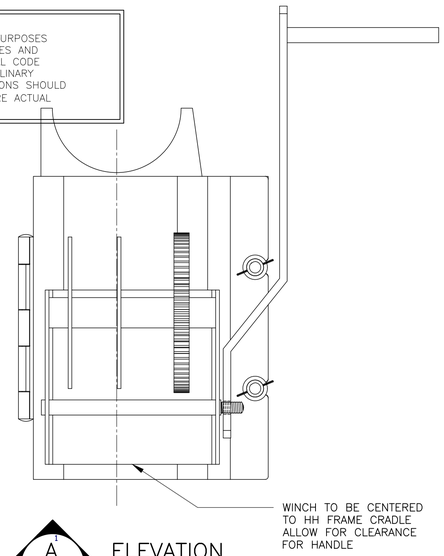

A / – ELEVATION
FRONT VIEW

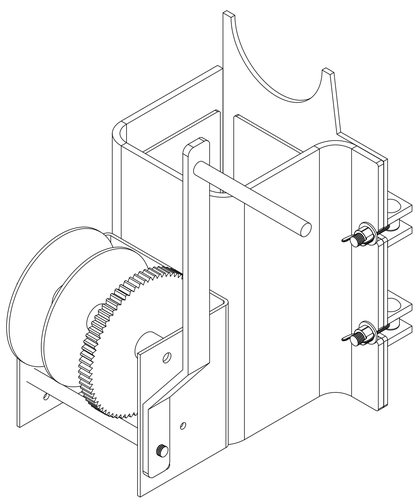

SEE LS 03H–003, DETAIL 9 FOR TOP VIEW DETAIL

ISOMETRIC VIEW
WINCH BASE & ASSEMBLY
C / –

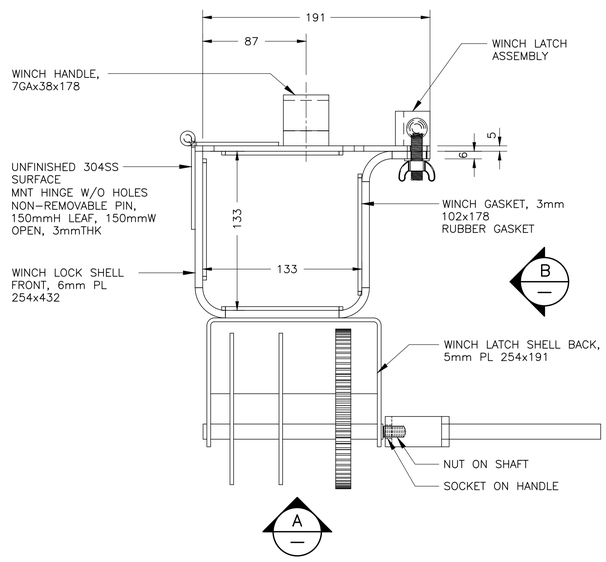

DETAIL
TOP VIEW
9 / –

NOTE:

1. WINCH ASSEMBLY CONTAINS
   – AUTO BREAK WINCH
   – 3053mm STAINLESS STEEL CABLE
   – SAFETY HOOK SYSTEM.
2. NUTS & BOLTS TO BE STAINLESS STEEL.
3. NUT ON SHAFT & SOCKET ON HANDLE DESIGN TO ALLOW DRILL TO TURN WINCH

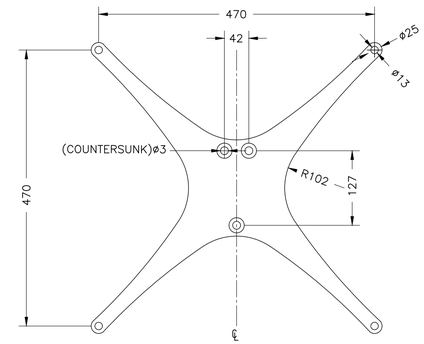

"X"BOX MOUNT
HARDWARE

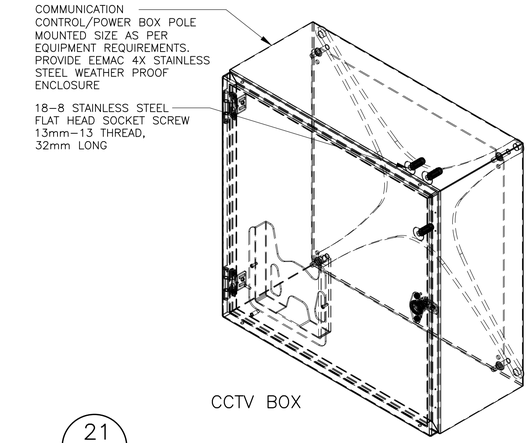

CCTV BOX

METRIC

ALL DIMENSIONS SHOWN ARE IN METRES AND/OR MILLIMETRES UNLESS OTHERWISE NOTED.

DETAIL
COMM. BOX
21 / LS 03H–001

NOTE: EQUIPMENT BOX ASSEMBLY SHALL BE FIELD INSPECTED IF NECESSARY FOR APPROVED TO USE

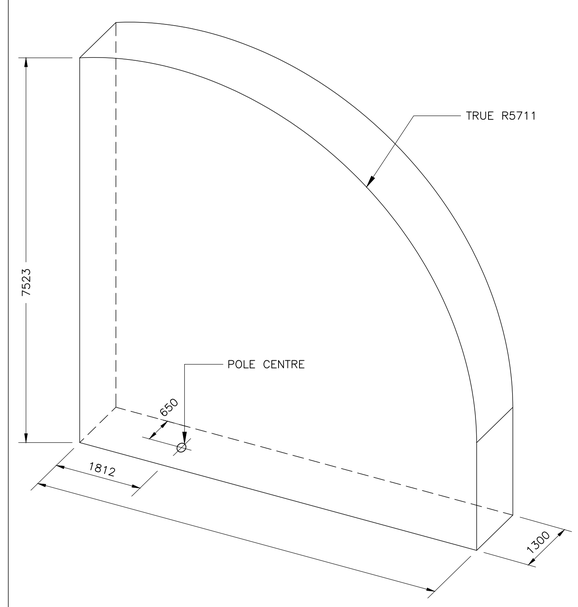

3D CLEARANCE FOOTPRINT (LIMITS)

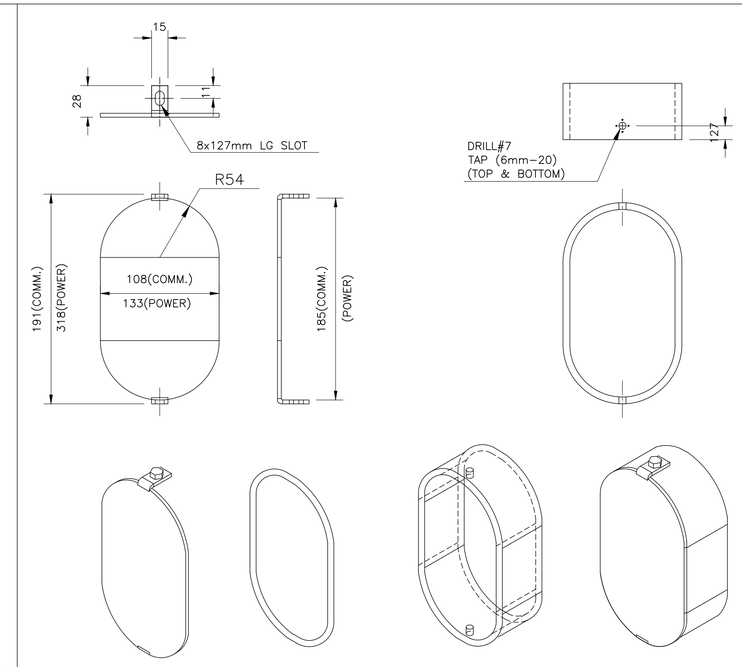

DETAIL
TAMPER PROOF
HANDHOLE ASSEMBLY
20 / LS 03H–002

METROLINX PROJECT NO. XXXXXX

REFERENCE DRAWINGS		ISSUE			REVISIONS		
					0		
DWG NO.	TITLE	NO.	DATE	ISSUED FOR	REV.	DATE	

DRAWN BY: X.X.X. YY/MM/DD	DESIGNED BY: YY/MM/DD
CHECKED BY: YY/MM/DD	APPROVED BY: YY/MM/DD
SCALE: 1:XXX	FULL SIZE ONLY

A Division of METROLINX

XXXXXXXX STATION
3M LIGHT STANDARD–HINGED POLE
WINCH ASSEMBLY

CONTRACT NO.	DWG. NO.	REV.	SHEET
XX–200X–EN–XXX	LS–03H–003	0	