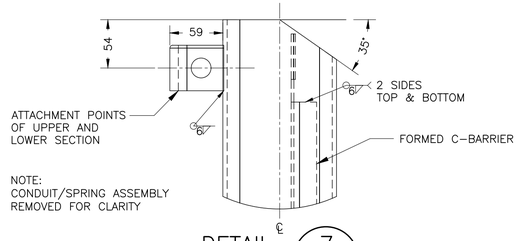

DETAIL 7 –

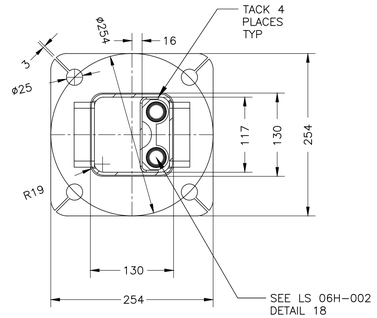

SECTION A–A

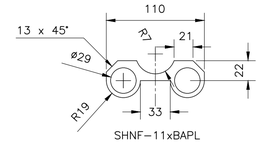

DETAIL 18 –
CONDUIT MOUNT PLATE

NOTE:
THIS DRAWING IS PROVIDED FOR INSTRUCTIONAL DESIGN PURPOSES ONLY BASED ON METROLINX GO TRANSIT DESIGN GUIDELINES AND REQUIREMENTS. THE CONSULTANT SHALL VERIFY FOR LOCAL CODE COMPLIANCE, EXISTING SITE CONDITIONS AND INTER DISCIPLINARY DRAWING COORDINATION. ALL DIMENSIONS AND SPECIFICATIONS SHOULD BE VERIFIED BY CONSULTANT AND/OR CONTRACTOR BEFORE ACTUAL CONSTRUCTION BEGINS.

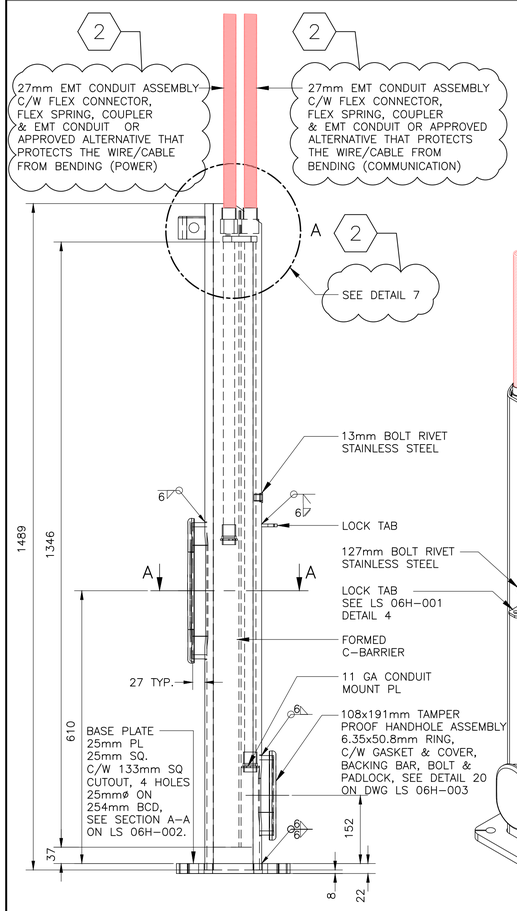

ELEVATION

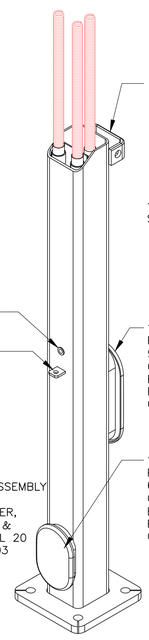

ISOMETRIC VIEW
SHOWN WITHOUT WINCH MOUNT

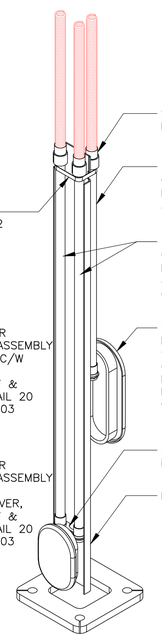

ISOMETRIC VIEW
SHOWN WITHOUT SQ TUBE

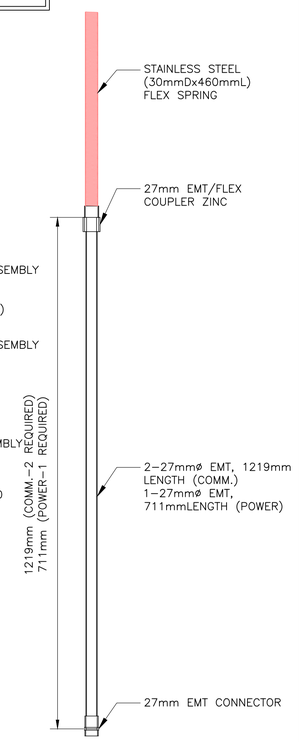

DETAIL 8 –
CONDUIT

DETAIL 1 LS 06H–001
LOWER SECTION

METRIC

ALL DIMENSIONS SHOWN ARE IN METRES AND/OR MILLIMETRES UNLESS OTHERWISE NOTED.

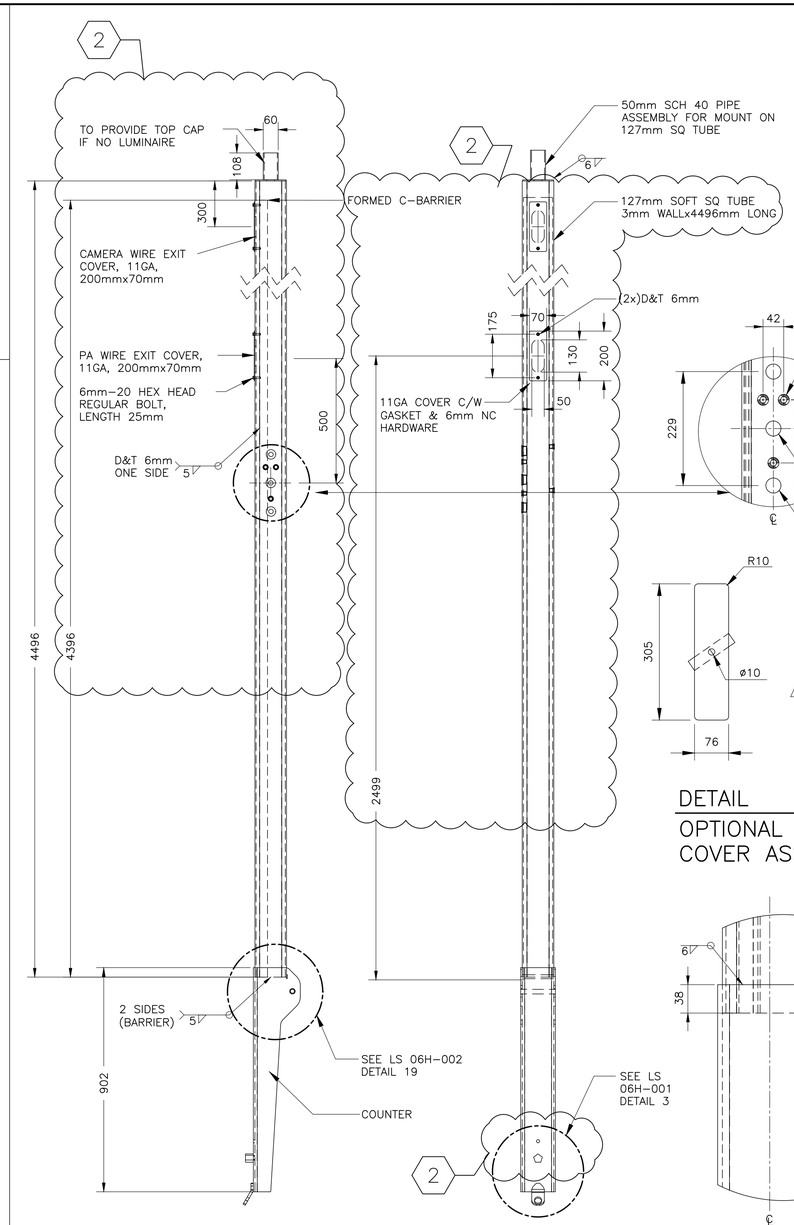

DETAIL 2 LS 06H–001
UPPER SECTION

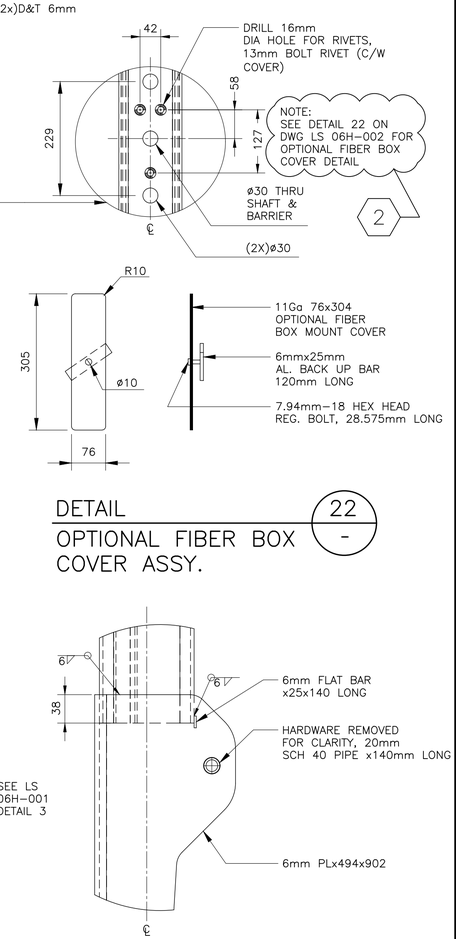

DETAIL 22 –
OPTIONAL FIBER BOX COVER ASSY.

DETAIL 19 –

METROLINX PROJECT NO. XXXXXX

REFERENCE DRAWINGS		ISSUE			REVISIONS		
					2		
					1	DEC 2013	DISCLAIMER NOTE
		0	09/07/17	ISSUED FOR CLIENT REVIEW	0	JAN 2013	NAME UPDATE
DWG NO.	TITLE	NO.	DATE	ISSUED FOR	REV.	DATE	

DRAWN BY: X.X.X. YY/MM/DD	DESIGNED BY: YY/MM/DD
CHECKED BY: YY/MM/DD	APPROVED BY: YY/MM/DD
SCALE: 1:XXX	FULL SIZE ONLY

A Division of METROLINX

XXXXXXXX STATION
6M LIGHT STANDARD–HINGED POLE
UPPER AND LOWER SECTIONS

CONTRACT NO.	DWG. NO.	REV.	SHEET
XX–200X–EN–XXX	LS 06H–002	2	