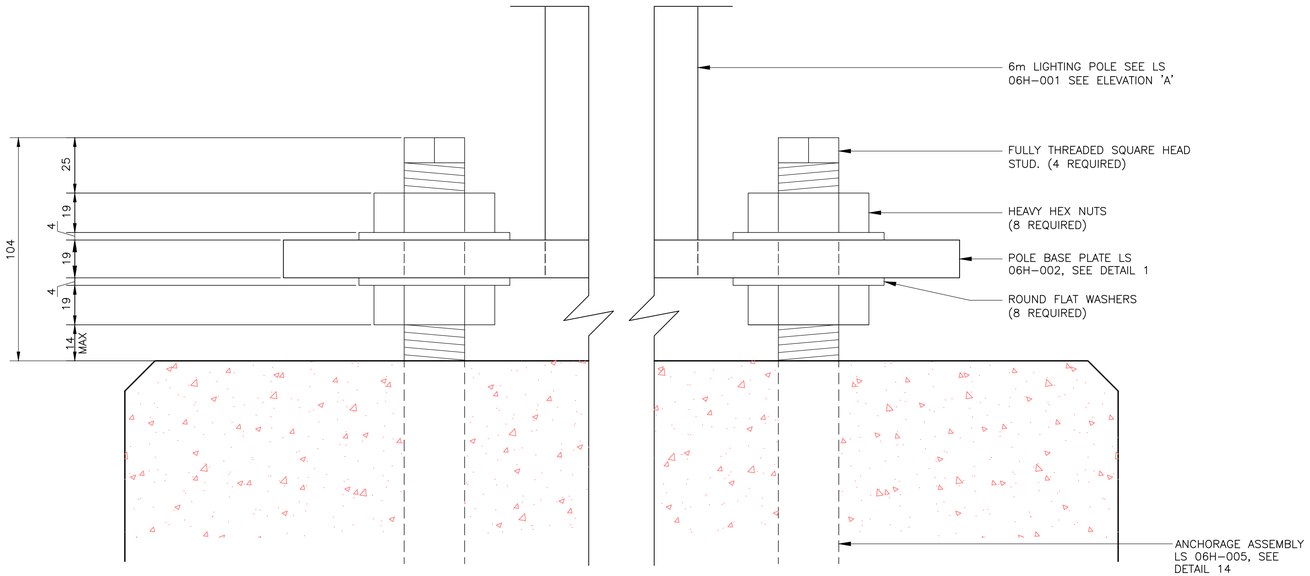

SIDE VIEW

DETAIL 17 / BASE MOUNTING (LS 06H-004)

METRIC

ALL DIMENSIONS SHOWN ARE IN METRES AND/OR MILLIMETRES UNLESS OTHERWISE NOTED.

TEMPLATE ARROW POINTS TO POLE DOWN SWING DIRECTION.

DATA SIDE POWER SIDE

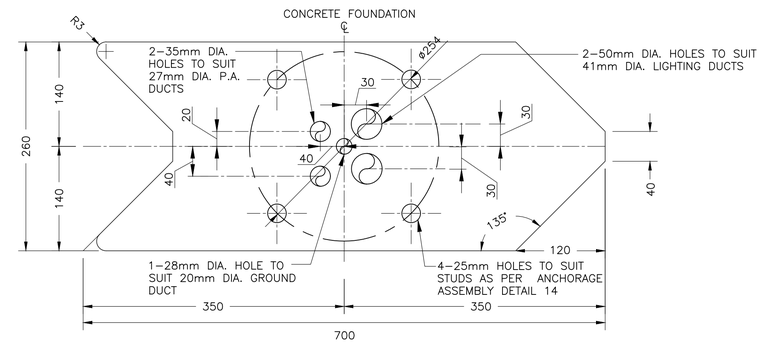

11GA STEEL TEMPLATE TO BE PROVIDED BY POLE MANUFACTURER

DETAIL 16 / SETTING TEMPLATE (–)

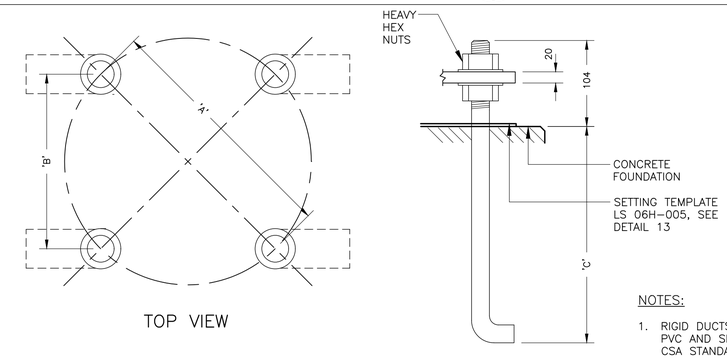

TOP VIEW

ANCHOR BOLT

BOLT CIRCLE DIAMETER TABLE			
STUD DIAMETER (mm)	BOLT CIRCLE DIA. 'A' (mm)	STUD DISTANCE 'B' (mm)	ANCHORAGE DEPTH 'C' (mm)
22 (7/8")	254 (10")	180 (7")	609

DETAIL 14 / ANCHORAGE ASSEMBLY (LS 06H-004)

NOTES:

1. RIGID DUCTS AND FITTINGS SHALL BE RIGID PVC AND SHALL MEET THE REQUIREMENTS OF CSA STANDARD.
2. ANCHOR BOLTS, HEX NUTS AND WASHERS SHALL BE MADE OF SAE 10-30 STEEL AND WILL BE HOT DIP GALVANIZED IN ACCORDANCE WITH CSA STANDARD G-164 SPECIFICATIONS.
3. STUDS WILL BE GIVEN A LIBERAL COATING OF WHITE NON-STAINING GREASE.
4. EACH ANCHORAGE ASSEMBLY SHALL BE FINISHED WITH ONE SETTING TEMPLATE FOR ACCURATE POSITION OF THE ANCHORAGE ASSEMBLY AND CONDUITS WITHIN THE FORM. TEMPLATE TO BE REMOVED AFTER CONCRETE HARDENS.

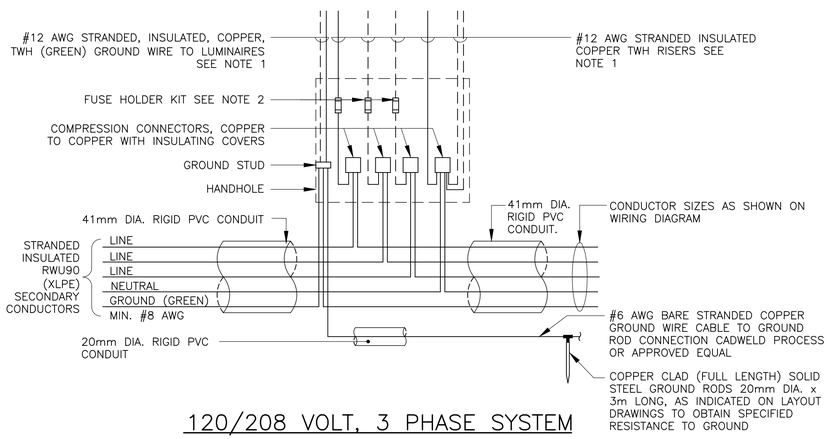

120/208 VOLT, 3 PHASE SYSTEM

NOTES:

1. BROKEN LINES INDICATE ADDITIONAL CONDUCTORS FOR DOUBLE LUMINAIRE INSTALLATION AND / OR ALTERNATE CIRCUIT IN ACCORDANCE WITH PLATFORM LIGHTING AND WIRING DIAGRAM DRAWINGS.
2. IN-LINE WATERPROOF FUSEHOLDER 600V, 30A WITH BREAKAWAY FEATURE. GOULD GEB-11-11 C/W WATERPROOF INSULATING BOOTS AND ONE 10 AMP FUSE TYPE KTK 600 VOLTS OR APPROVED EQUAL.
3. ALL GROUNDING WIRES TO BE FITTED WITH COMPRESSION LUGS BEFORE SECURING TO GROUND STUD IN POLE.

NOTE:
THIS DRAWING IS PROVIDED FOR INSTRUCTIONAL DESIGN PURPOSES ONLY BASED ON METROLINX GO TRANSIT DESIGN GUIDELINES AND REQUIREMENTS. THE CONSULTANT SHALL VERIFY FOR LOCAL CODE COMPLIANCE, EXISTING SITE CONDITIONS AND INTER DISCIPLINARY DRAWING COORDINATION. ALL DIMENSIONS AND SPECIFICATIONS SHOULD BE VERIFIED BY CONSULTANT AND/OR CONTRACTOR BEFORE ACTUAL CONSTRUCTION BEGINS.

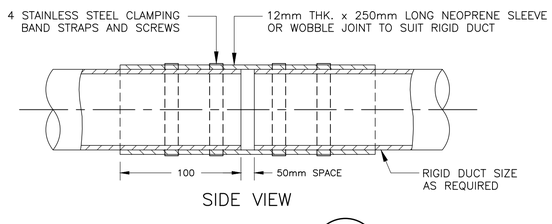

SIDE VIEW

DETAIL 15 / WOBBLE JOINT (LS 06H-004)

METROLINX PROJECT NO. XXXXXX

REFERENCE DRAWINGS		ISSUE			REVISIONS		
					1	DEC 2013	DISCLAIMER NOTE
		0	09/07/17	ISSUED FOR CLIENT REVIEW	0	JAN 2013	NAME UPDATE
DWG NO.	TITLE	NO.	DATE	ISSUED FOR	REV.	DATE	

DRAWN BY: X.X.X. YY/MM/DD	DESIGNED BY: YY/MM/DD
CHECKED BY: YY/MM/DD	APPROVED BY: YY/MM/DD
SCALE: 1:XXX	FULL SIZE ONLY

A Division of METROLINX

XXXXXXXX STATION

6M LIGHT STANDARD-HINGED POLE

ANCHORING DETAILS

CONTRACT NO.	DWG. NO.	REV.	SHEET
XX-200X-EN-XXX	LS 06H-005	1	