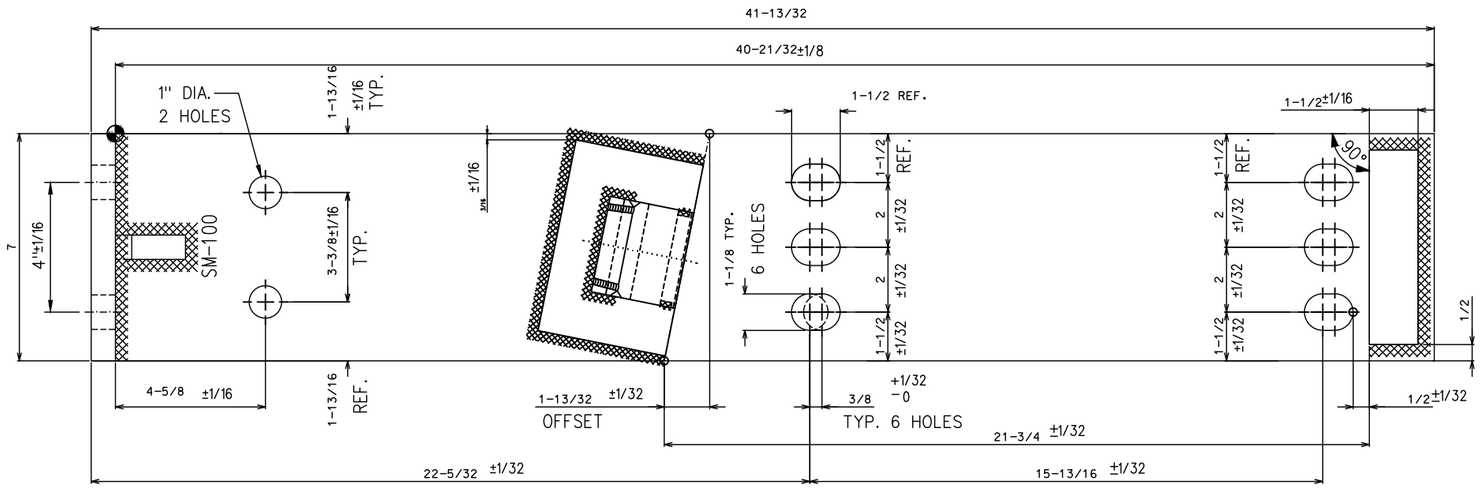

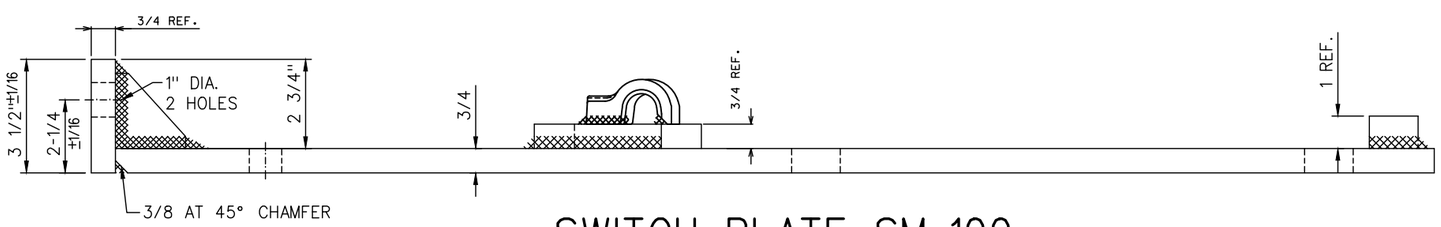

SWITCH PLATE SM-100

WEIGHT 108 LBS.

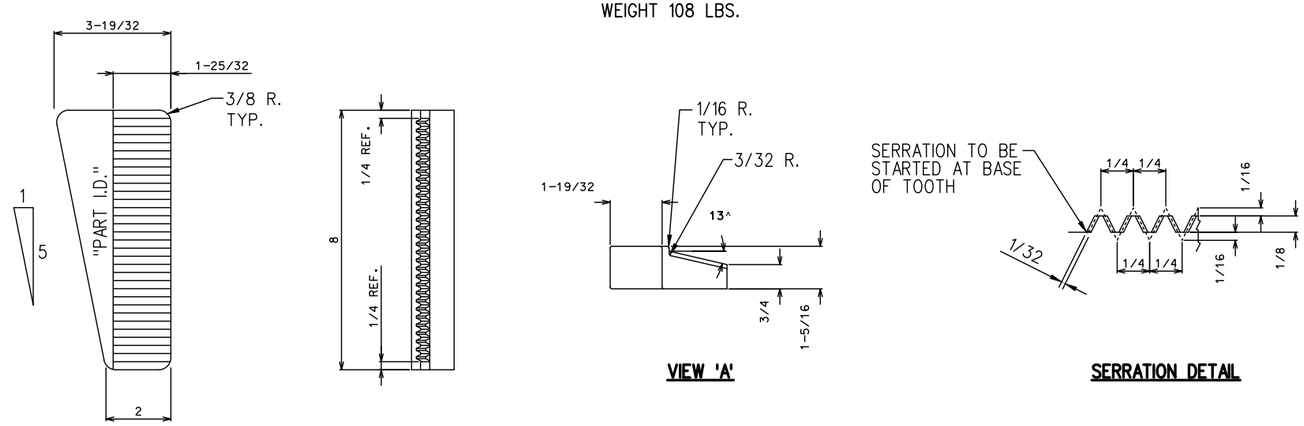

SWITCH PLATE CLAMP

WEIGHT 6.8 LBS.

NOTE: SWITCH PLATE CLAMP USED IN CONJUCTION WITH SERRATED WASHER (GTS-0354)

NOTES

1. WHEN REFERRING TO SWITCH PLATES, PLAN AND PLATE NUMBERS MUST BE STATED TO INDICATE SPECIFIC PLATE REQUIRED.
2. IDENTIFICATION CHARACTERS (1/2" MINIMUM HEIGHT) TO BE STAMPED ON EACH PLATE AS SHOWN.
3. ALL DIMENSIONS ARE IN INCHES.
4. UNLESS OTHERWISE SPECIFIED ALL TOLERANCES TO BE ±1/32.
5. TOLERANCES ARE NOT TO EXCEED THOSE INDICATED IN THE GO TOLERANCE DRAWINGS.

MATERIAL

PLATES TO CONFORM TO THE LATEST REVISION OF A.S.T.M. SPECIFICATION A-36 FOR COMMERCIAL QUALITY HOT ROLLED BAR STEEL CHEMICAL REQUIREMENT.

	MINIMUM	MAXIMUM
CARBON	0.25 %	0.29 %
MANGANESE	0.60 %	1.20 %
PHOSPHORUS		0.04 %
SULPHUR		0.05 %
SILICON		0.40 %

METRIC CONVERSION: 1 inch=25.4mm, 1 foot=304.8mm

No.	Date	Revision	By	Approved
1	18/07/27	ADDED IMPERIAL TO METRIC CONVERSION NOTE		

Standard

SWITCH MACHINE PLATE SM-100

Drawn BH Checked DL Approved VP Engineering & Asset Management

METROLINX

Date SEPT 15/2017 Plan Number GTS-0520 Rev 1

REFERENCE: TS-0520_R1

Sheet 1 OF 1