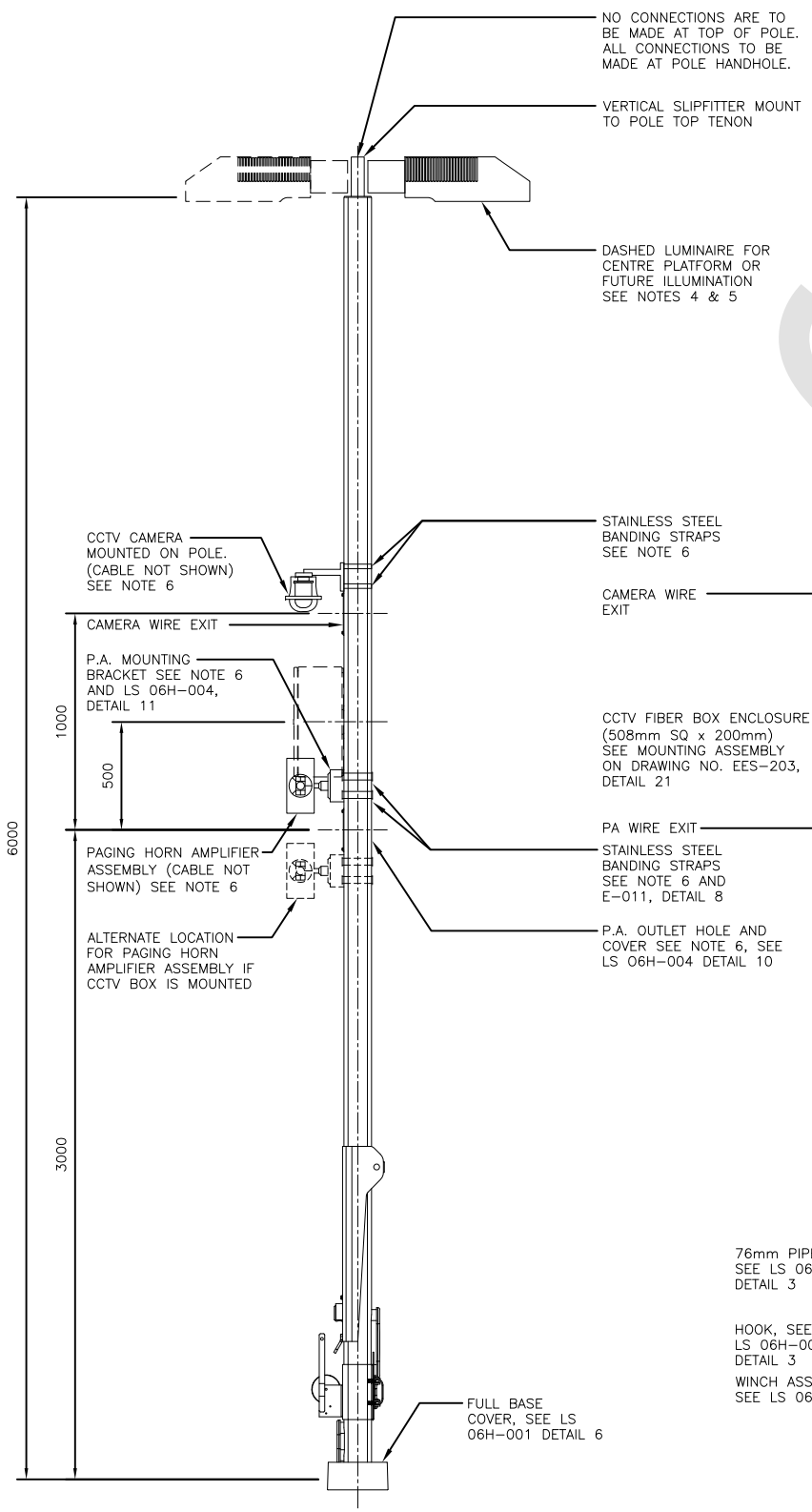

ELEVATION — A
TYPICAL PLATFORM LIGHTING POLE ASSEMBLY

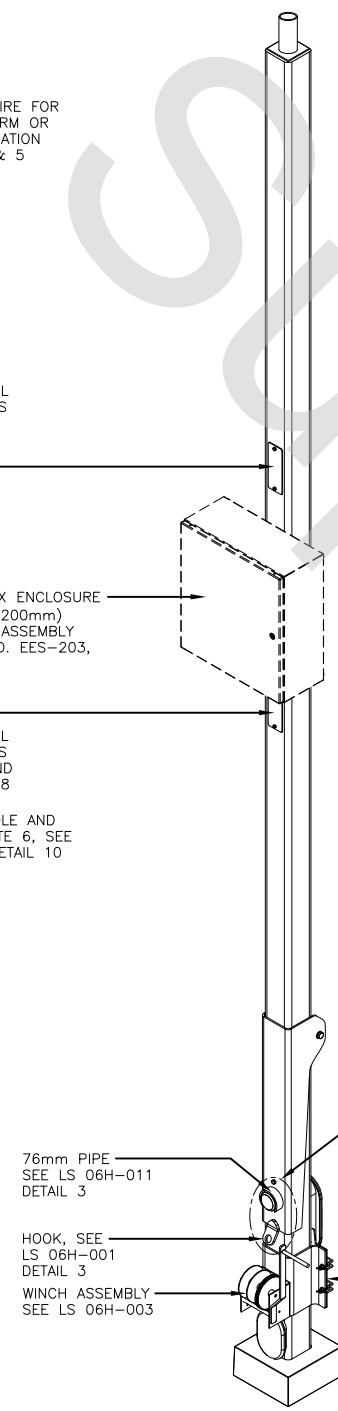

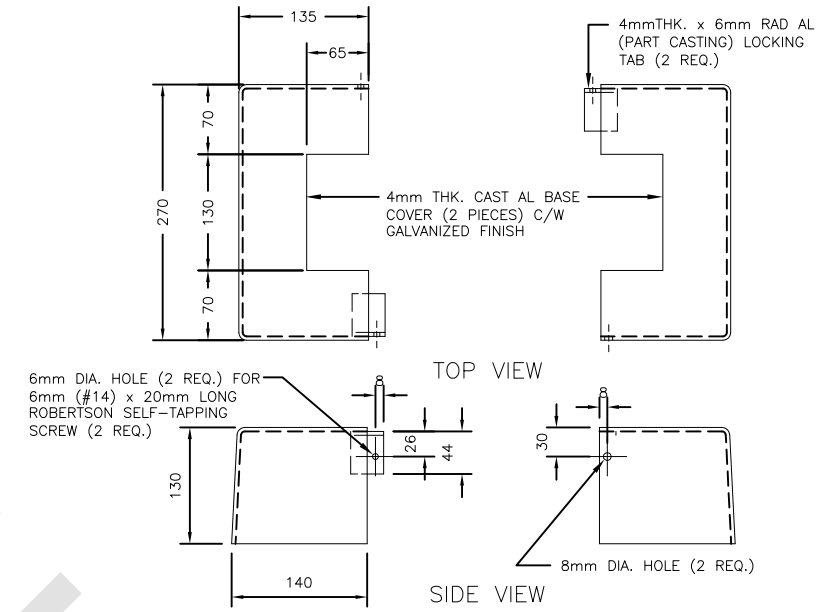

DETAIL — 6
FULL BASE COVER — –

NOTE:
THIS DRAWING IS PROVIDED FOR INSTRUCTIONAL DESIGN PURPOSES ONLY BASED ON METROLINX GO TRANSIT DESIGN GUIDELINES AND REQUIREMENTS. THE CONSULTANT SHALL VERIFY FOR LOCAL CODE COMPLIANCE, EXISTING SITE CONDITIONS AND INTER DISCIPLINARY DRAWING COORDINATION. ALL DIMENSIONS AND SPECIFICATIONS SHOULD BE VERIFIED BY CONSULTANT AND/OR CONTRACTOR BEFORE ACTUAL CONSTRUCTION BEGINS.

GENERAL NOTES:

1. THIS TYPICAL 6m STRAIGHT SQUARE GALVANIZED STEEL STEEL POLE ASSEMBLY IS GENERAL GUIDANCE FOR ELECTRICAL INSTALLATION APPLICABLE TO PLATFORM, BUS LOADING, KISS & RIDE AND WALKWAY AREA LIGHTING. FOR CONCRETE FOUNDATION REQUIREMENT, REFER TO LAYOUT DRAWINGS AND CONCRETE FOUNDATION REINFORCEMENT TABLE ON STANDARD DRAWING LS 06H-004.
2. FOR APPLICABLE LUMINAIRE MOUNTING HEIGHTS SEE NOTE 1 ABOVE.
3. THE HORIZONTAL AND VERTICAL TRACK CLEARANCES FOR ALL PLATFORM LIGHTING POLE INSTALLATIONS SHALL COMPLY WITH THE LATEST CANADIAN NATIONAL AND/OR CANADIAN PACIFIC RAILWAYS STANDARD CLEARANCE DIAGRAM. THE DESIGNER TO DETERMINE EXACT DISTANCE AND MUST OBTAIN WRITTEN APPROVALS BEFORE ANY WORK IS STARTED.
4. SECOND LUMINAIRE IS USUALLY NECESSARY FOR CENTRE PLATFORM LIGHTING OR AS DETERMINED BY SITE CONDITIONS; REFER TO LAYOUT DRAWINGS.
5. LUMINAIRE MATERIAL AND FINISH AS PER SPECIFICATION. COLOR TO BE PLATINUM SILVER. LUMINAIRE MANUFACTURER TO SUPPLY VERTICAL SLIP FITTER MOUNTS. 2
6. P.A. HARDWARE AND WIRING SUPPLIED AND INSTALLED AS SPECIFIED. FOR EXACT LOCATION OF SPEAKERS, REFER TO LAYOUT DRAWINGS.
7. GROUNDING RODS TO BE LOCATED AT BASE OF EVERY OTHER POLE OR EVERY 50m (PLATFORM ONLY.)
8. ORIENTATE POLE SUCH THAT POLE SWING PARALLEL TO TRACK.
9. LIGHTING POLE CONSTRUCTION AND COMPONENTS SHALL BE HOT DIP GALVANIZED STEEL C.S.A. G40.21-44 W MINIMUM WITH 50Ksi YIELD
10. SEE ELECTRICAL SPECIFICATIONS FOR ALL WELDING, WIND SPEED AND EPA STANDARDS.
11. ALL FASTENERS TO BE STAINLESS STEEL EXCEPT WHERE NOTED OTHERWISE.
12. POLE MANUFACTURER SHALL SUPPLY BOLTS, NUTS AND WASHERS TO TO SUIT DESIGN SPECIFIED IN NOTE 10 ABOVE.
13. SEE DRAWING LS 06H-004 FOR POLE CONCRETE FOUNDATION DETAIL.

METRIC

ALL DIMENSIONS SHOWN ARE IN METRES AND/OR MILLIMETRES UNLESS OTHERWISE NOTED.

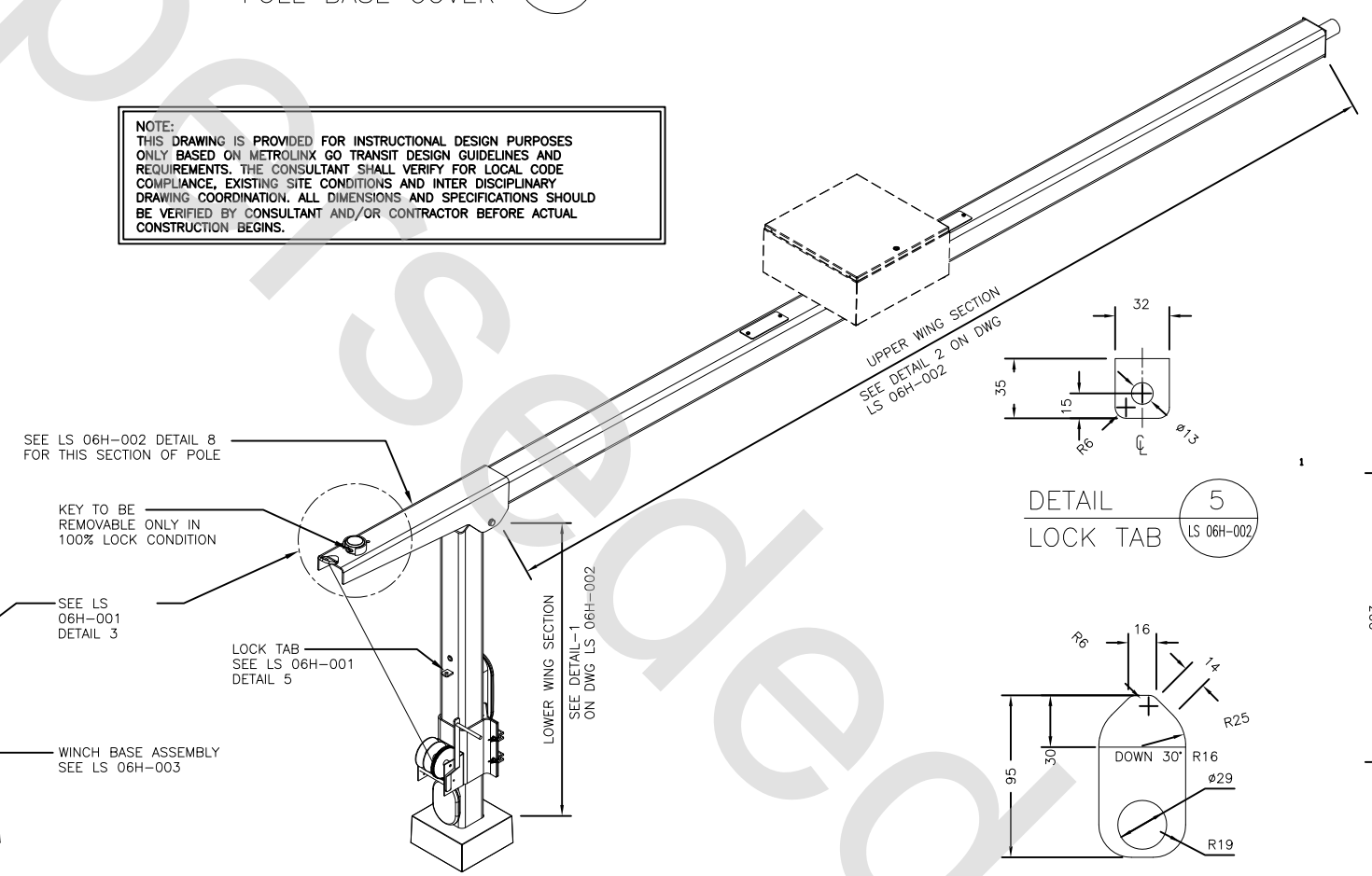

ISOMETRIC VIEW — B
TYPICAL PLATFORM LIGHTING POLE ASSEMBLY

DETAIL — 5
LOCK TAB — LS 06H-002

DETAIL — 4
HOOK — LS 06H-002

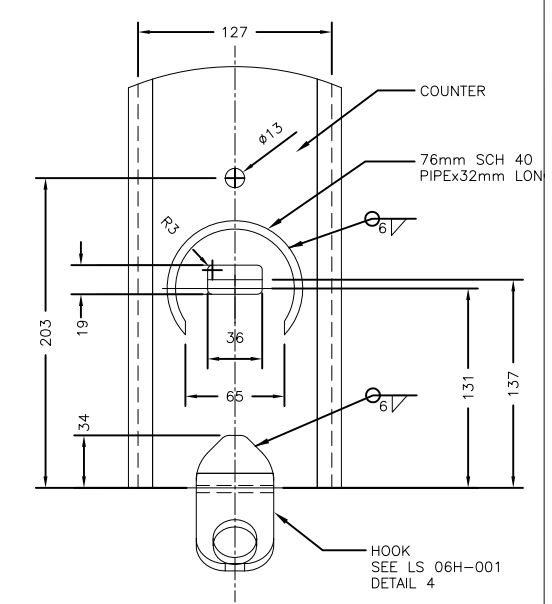

DETAIL — 3
LS 06H-002

METROLINX PROJECT NO. XXXXXX

REFERENCE DRAWINGS	
DWG NO.	TITLE

ISSUE		
NO.	DATE	ISSUED FOR
2	26/05/14	REVISED NOTE 5
1	20/12/13	DISCLAIMER NOTE
0	10/01/12	NAME UPDATE

REVISIONS		
REV.	DATE	

DRAWN BY: X.X.X. YY/MM/DD	DESIGNED BY: YY/MM/DD
CHECKED BY: YY/MM/DD	APPROVED BY: YY/MM/DD
SCALE: 1:XXX	FULL SIZE ONLY

A Division of METROLINX

XXXXXXXX STATION
6M LIGHT STANDARD-HINGED POLE
STANDARD DETAILS

CONTRACT NO.	DWG. NO.	REV.	SHEET
XX-200X-EN-XXX	LS 06H-001	2	X/XX

Supersedeq