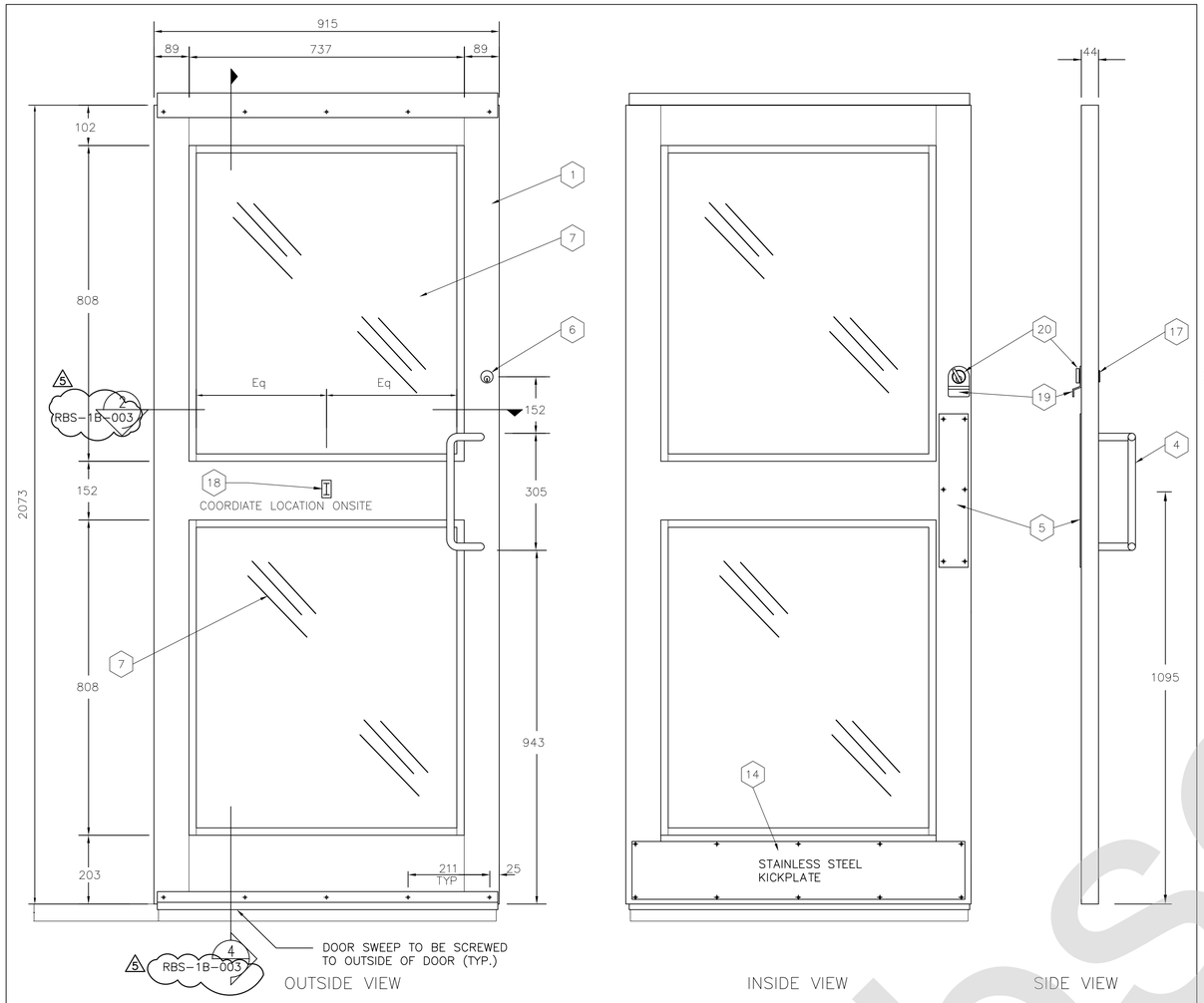

NOTE
1. EQUIP ONE DOOR WITH INTERIOR THUMB TURN AND EXTERIOR LOCK BACKING DUMMY.
2. EQUIP OTHER DOOR WITH EXTERIOR KEYED CYLINDER AND INTERIOR LOCK BACKING DUMMY.

1 DOOR ELEVATIONS

RBS-1B-003 SCALE: N.T.S.

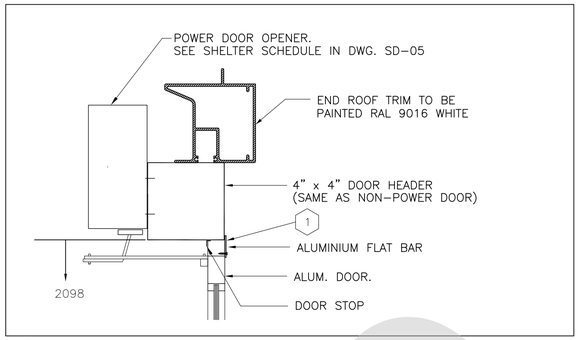

3 POWER DOOR OPENER DETAIL

RBS-1B-003 SCALE: N.T.S.

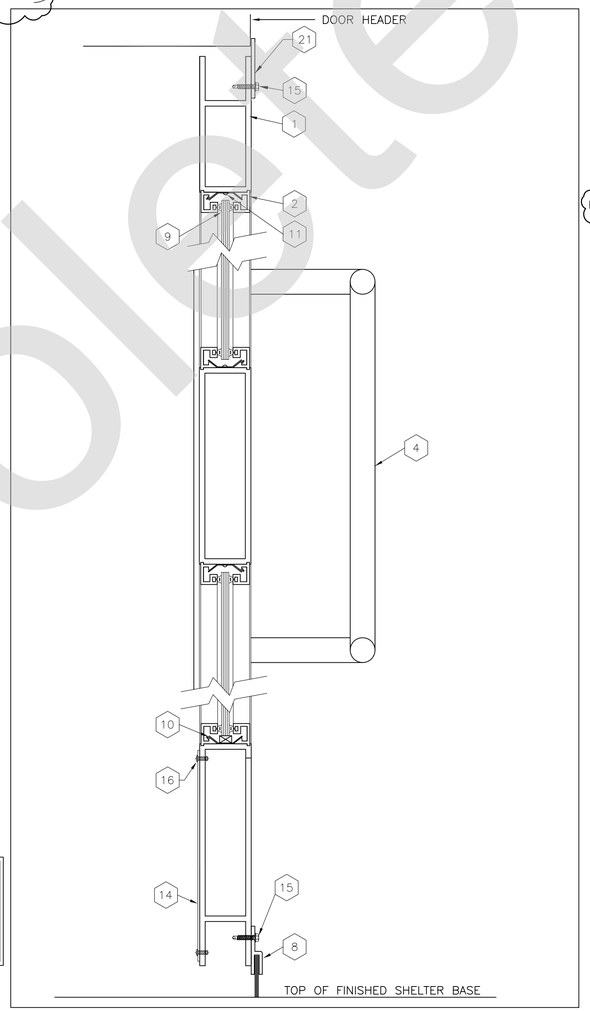

4 SECTION

RBS-1B-003 SCALE: N.T.S.

METRIC

ALL DIMENSIONS SHOWN ARE IN METRES AND/OR MILLIMETRES UNLESS OTHERWISE NOTED.

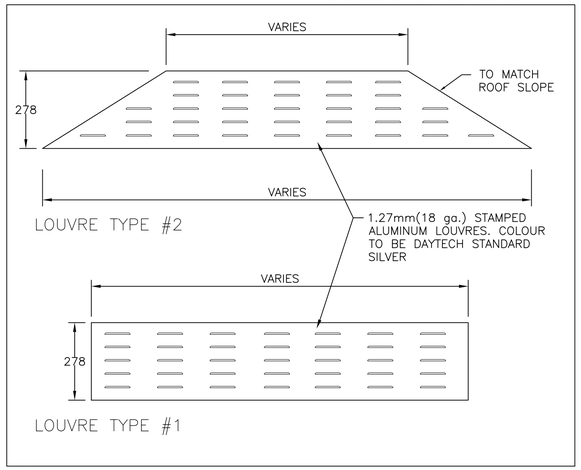

5 LOUVRE DETAILS

RBS-1B-003 SCALE: N.T.S.

1	DOOR FRAME	ALUMINUM	915 x 2073	1
2	SNAP ON GLAZING	ALUMINUM		16
3	CONTINUOUS HINGE	6.4mm PIN ST.STEEL	2066	1
4	PULL HANDLE	ALUMINUM	#220	1
5	PUSH PLATE	STAINLESS STEEL	CBH 923 80x400mm	1
6	KEY CYLINDER	RUSSWIN (CORBIN)	5253Ax29mm	1
7	TEMPERED GLASS		724 x 795 x 5 THK.	2
8	DOOR SWEEP C\W LONG BRUSH		889 LG.	1
9	RUBBER INSERT			AS REQUIRED
10	GLAZING CLIP			24
11	GLAZING SCREWS		#6x13mm SELF DRILLING SCREW	24
12	LOCK	24mm BS.x628CL	AR MS 1850A	1
13	#14 x 25mm LG.TEK SCREW	(8) PER SIDE	@292mm C/C	16
14	KICKPLATE	STAINLESS STEEL	150x883x3.0mm THK.	1
15	#10 x 19mm LG.TEK SCREW			10
16	SSD43 SS BSF RIVET	@ABT.210mm C/C	(KICK PLATE TO DOOR)	10
17	LOCK BACKING DUMMY			2
18	DOOR OPEN HOLDER	ZINC PLATED	SPAE-NAUR D-4019	1
19	CYLINDER PULL	ZINC DIE CAST		2
20	THUMB TURN	ALUMINUM		1
21	FLAT BAR	ALUMINUM		1

NOTE: FOR NON-POWER OPERATED DOOR, PROVIDE LCN 2010 CLOSURE

PREPARATION:
1. DOOR LOCK
2. PULL HANDLE
3. PUSH BAR

NO PREP FOR HINGES

FINISH:
DOOR FRAME – TO BE PAINTED DAYTECH STANDARD SILVER
DOOR HANDLE – CLEAR ANODIZED

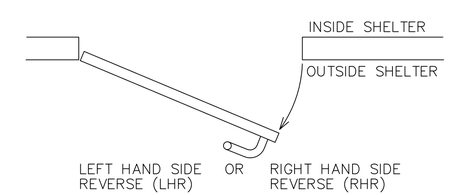

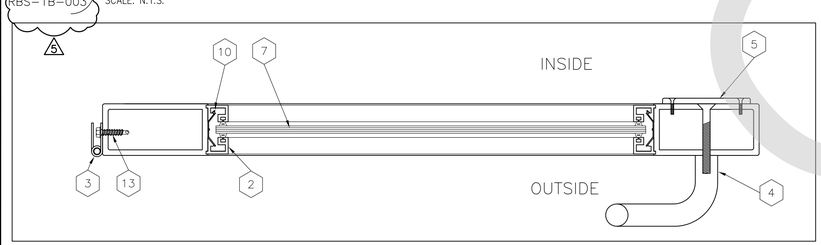

2 PLAN VIEW

RBS-1B-003 SCALE: N.T.S.

NOTE:
THIS DRAWING IS PROVIDED FOR INSTRUCTIONAL DESIGN PURPOSES ONLY BASED ON METROLINX GO TRANSIT DESIGN GUIDELINES AND REQUIREMENTS. THE CONSULTANT SHALL VERIFY FOR LOCAL CODE COMPLIANCE, EXISTING SITE CONDITIONS AND INTER DISCIPLINARY DRAWING COORDINATION. ALL DIMENSIONS AND SPECIFICATIONS SHOULD BE VERIFIED BY CONSULTANT AND/OR CONTRACTOR BEFORE ACTUAL CONSTRUCTION BEGINS.

Obsolete

METROLINX PROJECT NO.

REFERENCE DRAWINGS		ISSUE			REVISIONS		
					5	JUNE 2014	UPDATED REFERENCE TEXT SCALE
					4	DEC 2013	DISCLAIMER NOTE
					3	SEPT 2013	RAMP AND HANDRAIL REVISIONS
					2	AUG 2013	COLOUR REVISION
					1	JULY 2012	NOMENCLATURE REVISION
DWG NO.	TITLE	REV.	DATE	ISSUED FOR	REV.	DATE	

DRAWN BY: G.R 07/09/22	DESIGNED BY: GO TRANSIT
CHECKED BY: D.S.P	APPROVED BY:
SCALE: NONE	FULL SIZE ONLY

A Division of Metrolinx

NEW SHELTERS

PEAKED ROOF SHELTERS

DOOR DETAILS

CONTRACT NO.	DWG. NO.	REV.	SHEET
	RBS-1B-003	5	