NOTE:
THIS DRAWING IS PROVIDED FOR INSTRUCTIONAL DESIGN PURPOSES ONLY BASED ON METROLINX GO TRANSIT DESIGN GUIDELINES AND REQUIREMENTS. THE CONSULTANT SHALL VERIFY FOR LOCAL CODE COMPLIANCE, EXISTING SITE CONDITIONS AND INTER DISCIPLINARY DRAWING COORDINATION. ALL DIMENSIONS AND SPECIFICATIONS SHOULD BE VERIFIED BY CONSULTANT AND/OR CONTRACTOR BEFORE ACTUAL CONSTRUCTION BEGINS.

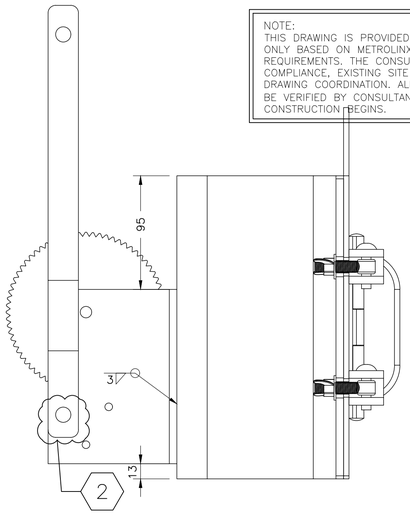

B – ELEVATION RIGHT SIDE VIEW

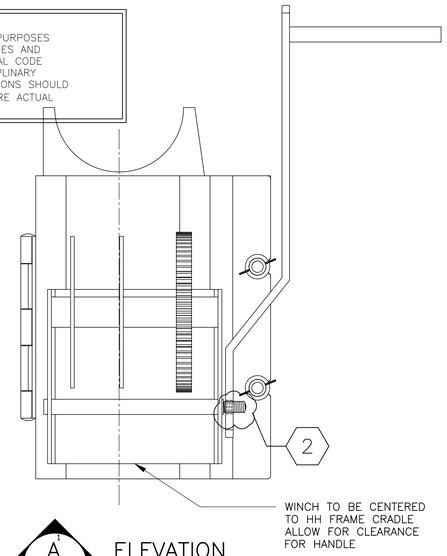

A – ELEVATION FRONT VIEW

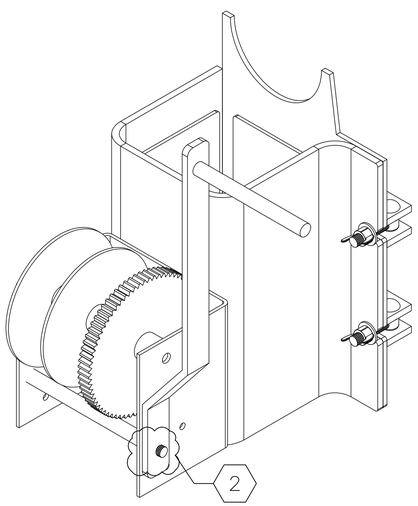

SEE LS 06H-003, DETAIL 9 FOR TOP VIEW DETAIL

ISOMETRIC VIEW C –
WINCH BASE & ASSEMBLY

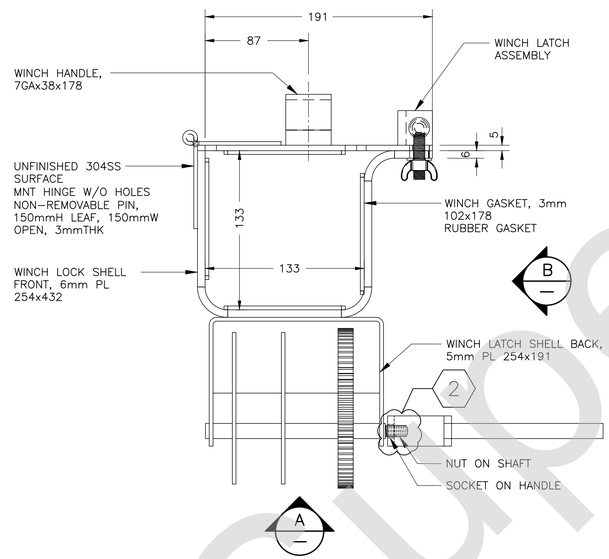

DETAIL 9 –
TOP VIEW

NOTE:

1. WINCH ASSEMBLY CONTAINS
   - AUTO BREAK WINCH
   - 3053mm STAINLESS STEEL CABLE
   - SAFETY HOOK SYSTEM.
2. NUTS & BOLTS TO BE STAINLESS STEEL.
3. NUT ON SHAFT & SOCKET ON HANDLE DESIGN TO ALLOW DRILL TO TURN WINCH
4. DO NOT DRILL INTO POLE TO MOUNT BOX. USE STAINLESS STEEL BANDING TO SECURE PROPERLY TO POLE.
5. BOX IS TO BE KEY LOCKING TYPE.
6. DIN RAILS PROVIDED AS NEEDED.
7. RECEPTACLES INSIDE ENCLOSURE SHALL BE GFI OR BETTER.
8. NO POWER BARS OF ANY KIND ALLOWED.

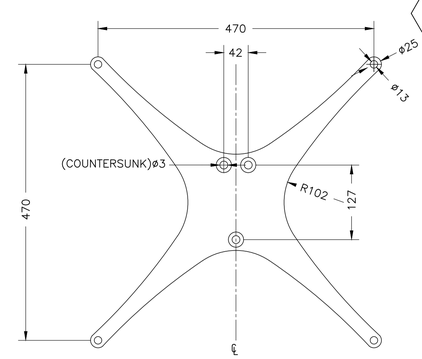

"X"BOX MOUNT HARDWARE

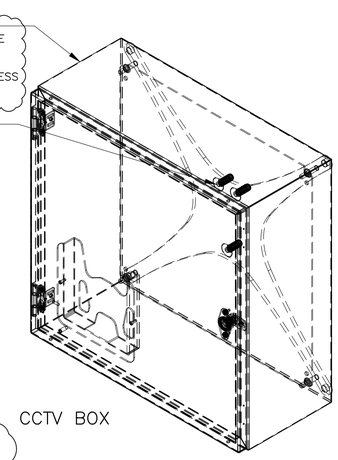

CCTV BOX

METRIC

ALL DIMENSIONS SHOWN ARE IN METRES AND/OR MILLIMETRES UNLESS OTHERWISE NOTED.

2

DETAIL 21
COMM. BOX LS 06H-001

NOTE: EQUIPMENT BOX ASSEMBLY SHALL BE FIELD INSPECTED IF NECESSARY FOR APPROVED TO USE

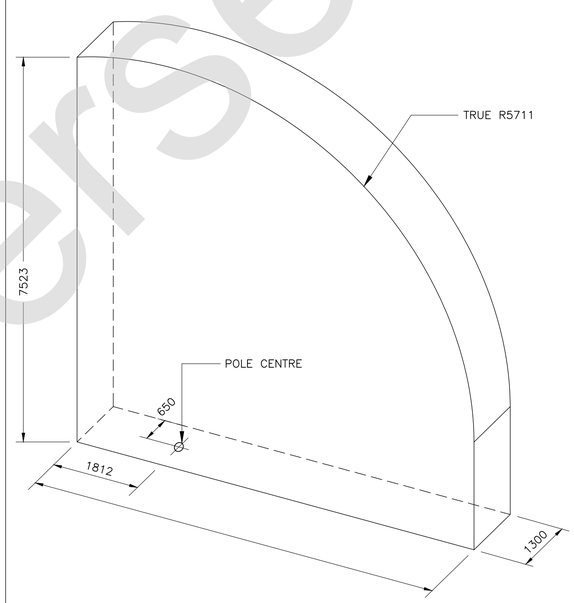

3D CLEARANCE FOOTPRINT (LIMITS)

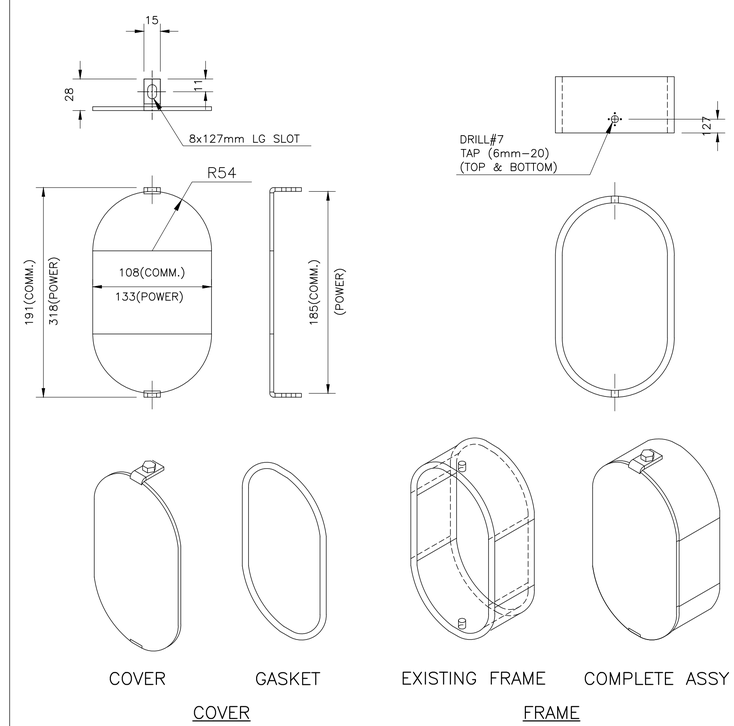

DETAIL 20
TAMPER PROOF HANDHOLE ASSEMBLY
LS 06H-002

METROLINX PROJECT NO. XXXXXX

Superseded

REFERENCE DRAWINGS		ISSUE			REVISIONS		
					2		
		0	09/07/17	ISSUED FOR CLIENT REVIEW	1	20/12/13	DISCLAIMER NOTE
DWG NO.	TITLE	NO.	DATE	ISSUED FOR	REV.	DATE	

DRAWN BY: X.X.X. YY/MM/DD	DESIGNED BY: YY/MM/DD
CHECKED BY: YY/MM/DD	APPROVED BY: YY/MM/DD
SCALE: 1:XXX	FULL SIZE ONLY

A Division of METROLINX

XXXXXXXX STATION
6M LIGHT STANDARD-HINGED POLE
WINCH ASSEMBLY

CONTRACT NO.	DWG. NO.	REV.	SHEET
XX-200X-EN-XXX	LS-06H-003	2	