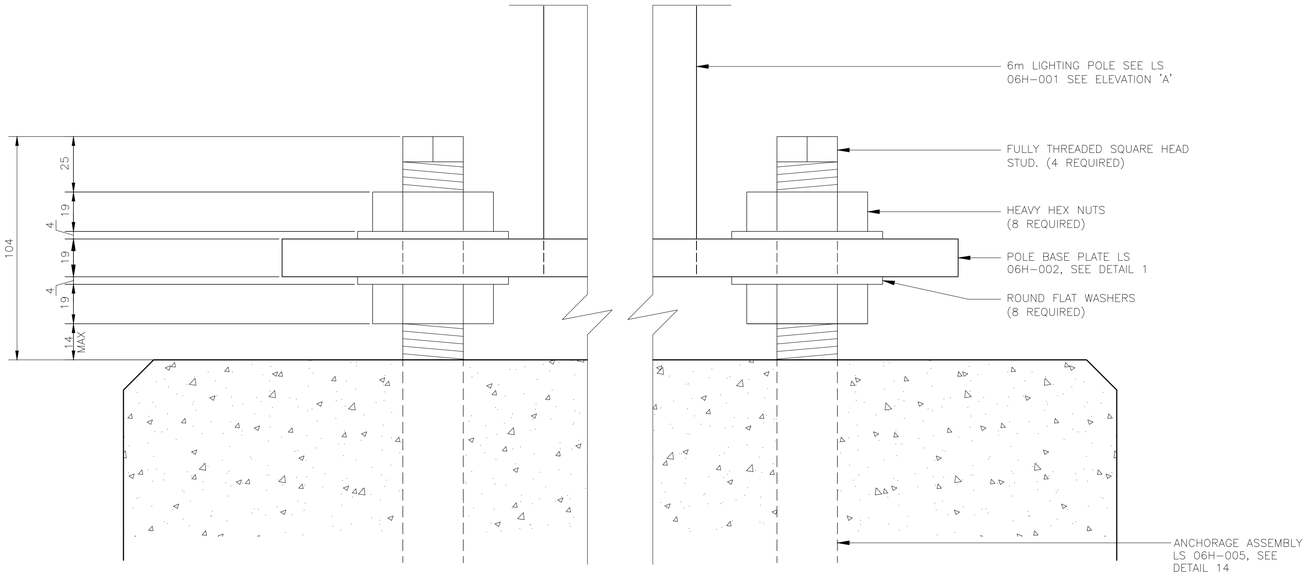

SIDE VIEW

DETAIL 17 / BASE MOUNTING (LS-06H-005)

NOTE:
THIS DRAWING IS PROVIDED FOR INSTRUCTIONAL DESIGN PURPOSES ONLY BASED ON METROLINX GO TRANSIT DESIGN GUIDELINES AND REQUIREMENTS. THE CONSULTANT SHALL VERIFY FOR LOCAL CODE COMPLIANCE, EXISTING SITE CONDITIONS AND INTER DISCIPLINARY DRAWING COORDINATION. ALL DIMENSIONS AND SPECIFICATIONS SHOULD BE VERIFIED BY CONSULTANT AND/OR CONTRACTOR BEFORE ACTUAL CONSTRUCTION BEGINS.

TEMPLATE ARROW POINTS TO POLE DOWN SWING DIRECTION.

DATA SIDE POWER SIDE

METRIC

ALL DIMENSIONS SHOWN ARE IN METRES AND/OR MILLIMETRES UNLESS OTHERWISE NOTED.

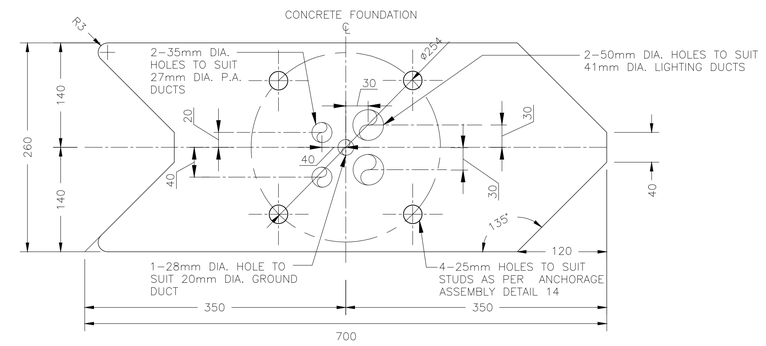

11GA STEEL TEMPLATE TO BE PROVIDED BY POLE MANUFACTURER

DETAIL 16 / SETTING TEMPLATE (LS-06H-005)

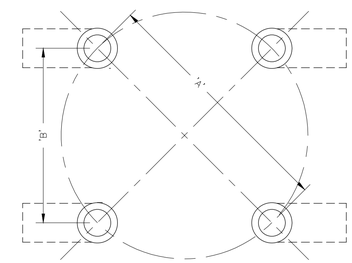

TOP VIEW

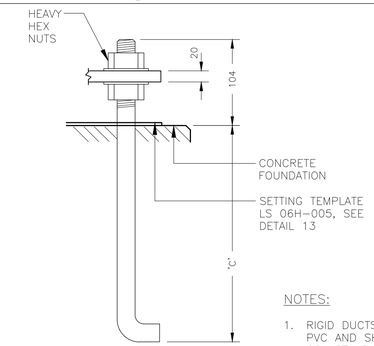

ANCHOR BOLT

BOLT CIRCLE DIAMETER TABLE			
STUD DIAMETER (mm)	BOLT CIRCLE DIA. 'A' (mm)	STUD DISTANCE 'B' (mm)	ANCHORAGE DEPTH 'C' (mm)
22 (7/8")	254 (10")	180 (7")	609

DETAIL 14 / ANCHORAGE ASSEMBLY (LS-06H-005)

NOTES:

1. RIGID DUCTS AND FITTINGS SHALL BE RIGID PVC AND SHALL MEET THE REQUIREMENTS OF CSA STANDARD.
2. ANCHOR BOLTS, HEX NUTS AND WASHERS SHALL BE MADE OF SAE 10-30 STEEL AND WILL BE HOT DIP GALVANIZED IN ACCORDANCE WITH CSA STANDARD G-164 SPECIFICATIONS.
3. STUDS WILL BE GIVEN A LIBERAL COATING OF WHITE NON-STAINING GREASE.
4. EACH ANCHORAGE ASSEMBLY SHALL BE FINISHED WITH ONE SETTING TEMPLATE FOR ACCURATE POSITION OF THE ANCHORAGE ASSEMBLY AND CONDUITS WITHIN THE FORM. TEMPLATE TO BE REMOVED AFTER CONCRETE HARDENS.

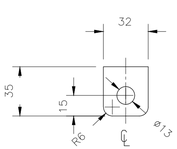

DETAIL 5 / LOCK TAB (LS 06H-005)

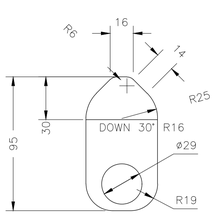

DETAIL 4 / HOOK (LS-06H-005)

3

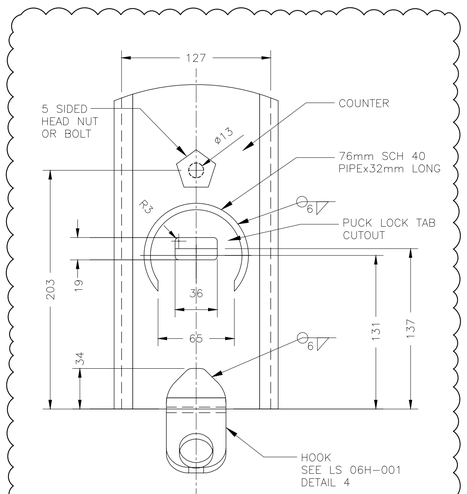

DETAIL 3 (LS-06H-005)

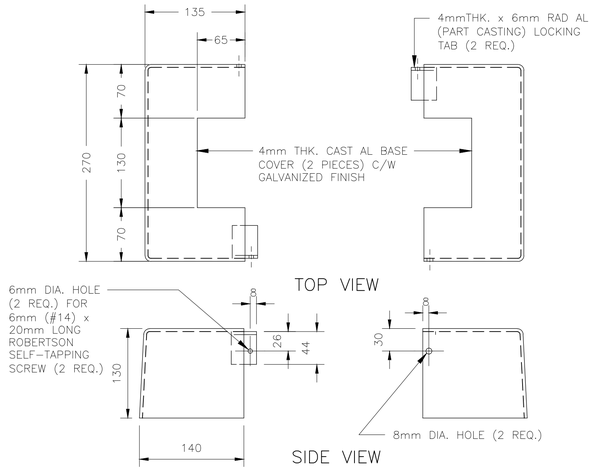

DETAIL 6 / FULL BASE COVER (LS-06H-005)

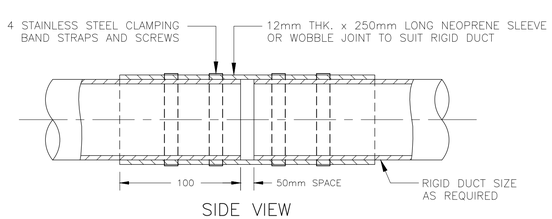

SIDE VIEW

DETAIL 15 / WOBBLE JOINT (LS-06H-005)

METROLINX PROJECT NO. XXXXXX

REFERENCE DRAWINGS	
DWG NO.	TITLE

ISSUE		
NO.	DATE	ISSUED FOR
0	09/07/17	ISSUED FOR CLIENT REVIEW

REVISIONS		
REV.	DATE	
3	26/03/23	PUCK LOCK CLARIFICATION
2	24/07/05	ADD RELOCATED DETAIL FROM LS 06H-001 & 001.1. RELOCATED WIRING DIAGRAM TO NEW DWG LS 06H-006.
1	DEC 2013	DISCLAIMER NOTE
0	JAN 2013	NAME UPDATE

DRAWN BY: YY/MM/DD	DESIGNED BY: YY/MM/DD
CHECKED BY: YY/MM/DD	APPROVED BY: YY/MM/DD
SCALE: N.T.S.	FULL SIZE ONLY

METROLINX

XXXXXXXX STATION

6m LIGHT STANDARD-HINGED POLE

ANCHORING DETAILS

CONTRACT NO.	DWG. NO.	REV.	SHEET
XX-200X-EN-XXX	LS 06H-005	3	